REV.	ECN.NO.	DATE
A	RELEASED	11/04/08
C	Add Lockkey Add Dimension Add Color Modify Plating Modify Housing UL	07/15-'19
D	Delete discontinued item No	04/11-'22

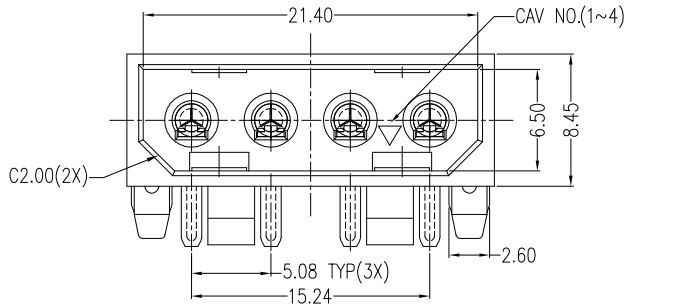

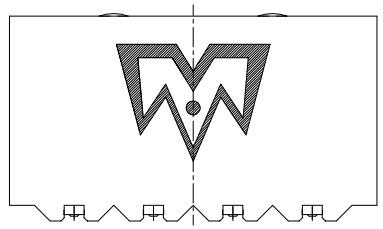

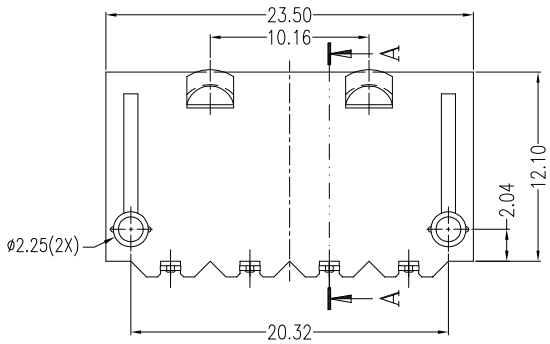

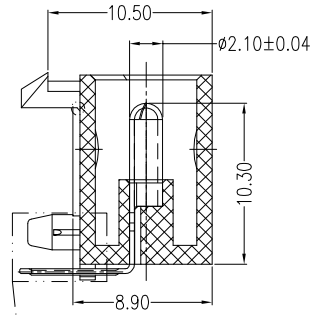

SECT A-A

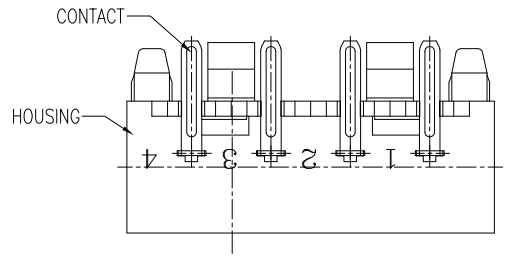

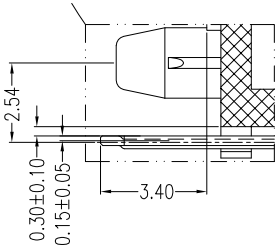

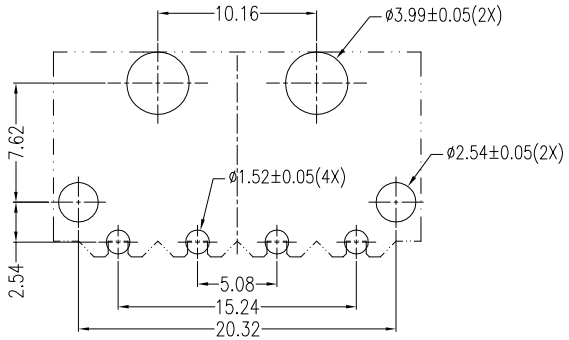

P.C.B LAYOUT
COMPONENT SIDE

NOTES:

*Material

Housing: Nylon66, UL 94V-2;
or Nylon46, UL 94V-0;
Contact: Brass
Plating: Sn(100u"min) Plating over all,
Ni(40u"min) underplating over all.

*Electrical Specification

Operation Voltage: 250 VAC max.
Current Rating: 5.0A
Contact Resistance: 10 Milliohms max.
Insulation Resistance: 1000 Megohms min.
Dielectric Withstanding Voltage: 1500V AC

*Environmental

Operating Temperature: -40°C to +80°C

*How to order:

WPOD-04T2NABUW

- Blank:No Kink
- W:Winning Mark Blank:No Mark
- U:Lead Free Blank:Sn-Pb
- B:Brass
- 1:Black A:Transparent
- N:Nylon66 N4:Nylon46
- 2:Right Angle(90°)
- T:Tin Plating
- Number of contacts
- Big 4PIN(5.08 Disk Drive Power)

REV	Delete discontinued item No				
Units	mm	Scale	1:1	Drawing By ZT	Date 04/11-'22
Tolerance Unless Otherwise Specified				Reviewed By Charles	Date 04/11-'22
.X	~	±0.35		Approval By Nancy	Date 04/25-'22
.XX	~	±0.25			
.XXX	~	±0.15			
Angle	~	± 3°			

WIN WIN PRECISION IND. CO., LTD.
TEL: 886-2-22994155 FAX: 886-2-22994157

Date	04/11-'22	Title	Power 4 Pins Type(No Kink)
Sheet	1 of 1		
Third Angle Projection			
Drawing No.	WPOD-04PS-AN-W093	REV	D