REV.	ECN.NO.	DATE
A	RELEASED	09/07/05
I	Modify View	03/10-'20
J	Delete Stop Production Spec	06/15-'20

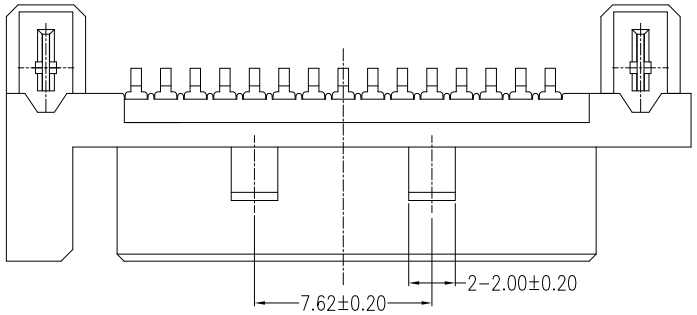

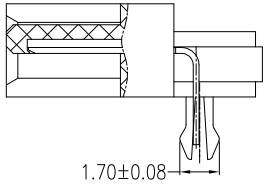

SECTION A-A

PIN NO.	SIGNAL NAME
P1	V3.3
P2	V3.3
P3	V3.3
P4	GND
P5	GND
P6	GND
P7	V5
P8	V5
P9	V5
P10	GND
P11	DAS/DSS
P12	GND
P13	V12
P14	V12
P15	V12

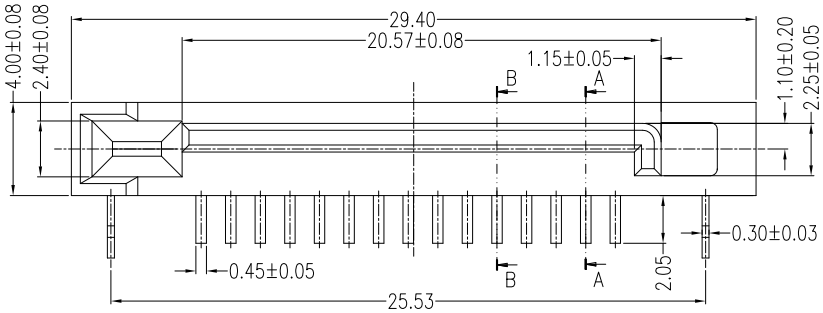

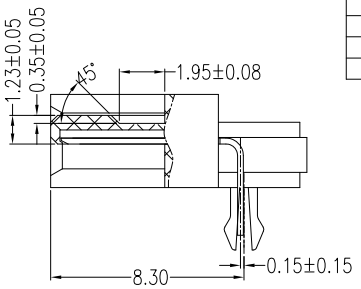

SECTION B-B

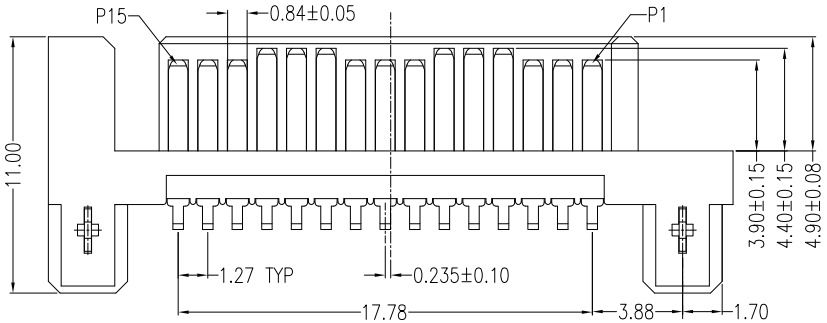

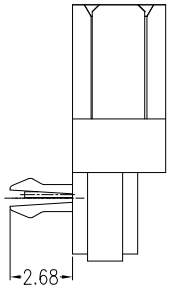

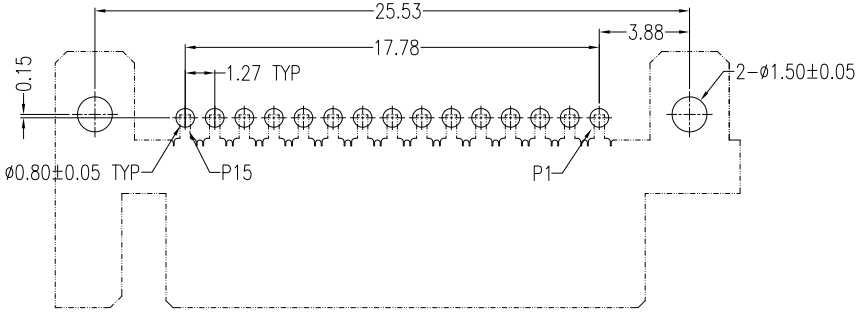

P.C.B. LAYOUT T=1.60mm

COMPONENT SIDE

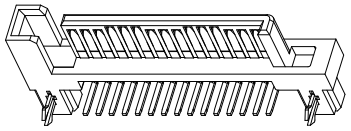

NOTES:

*Mateial

Housing: LCP, UL 94V-0 Rated, Color: Black;
Contact: Brass;
Plating: Au Plating On Contact Area;
Sn(100u" Min.) Plating On Solder Tail;
Ni(50u" Min.) Underplating Overall.
Harpoon: Brass
Plating: Sn(100u" Min.) Plating On Solder Tail;
Ni(50u" Min.) underplating overall.

*Mechanical

Insertion Force: 45N Max.
Withdrawal Force: 10N Min.
Durability: 500 cycles

*Electrical Specification

Current Rating: 1.5 Ampere Per Contact
Contact Resistance: 30mΩ Max.
Insulation Resistance: 1000MΩ Min.
Dielectric Withstanding Voltage: 500V AC

*Environmental

Operating Temperature: -55°C To +85°C

*How To Order:

WATH-15DLBBU 4

- Blank:With-Post / 4:Tube
- Blank:No Mark / U:Lead Free
- B:Standard DIP Type
- B:Brass
- L:LCP
- Au: A:>0.8u"; D:15u"
- Number Of Contacts
- Series NO.:SATA For H.D

REV	Remove the spec of N: Non-Post & 3: Tray & W: Winning Mark & F: 30u"

Units	mm	Scale	
Tolerance Unless Otherwise Specified			
.X	~	±0.35	
.XX	~	±0.25	
.XXX	~	±0.15	
Angle	~	± 3°	

Drawing By	Date
ZK	06/15-'20
Reviewed By	**Date**
LDF	06/17-'20
Approval By	**Date**
Nancy	06/22-'20

WIN WIN PRECISION IND. CO., LTD.
TEL: 886-2-22994155 FAX: 886-2-22994157

Date	06/15-'20	Title	SATA 15P Right Angle Standard DIP Type Male
Sheet	1 of 1		
Third Angle Projection		Drawing No.	WATH-15PS-AN-N128 REV J