REV.	ECN.NO.	DATE
A	RELEASED	11/09-'05
F	Modify View	03/20-'18
G	Modify Notes And PCB Layout	09/20-'18

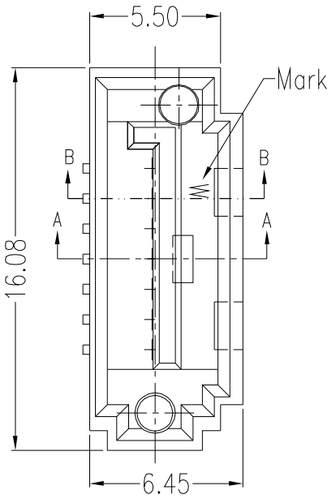

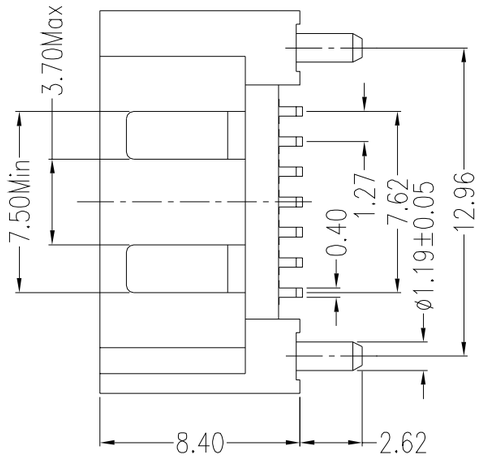

PIN	SIGNAL NAME
S1	GND
S2	A+
S3	A-
S4	GND
S5	B-
S6	B+
S7	GND

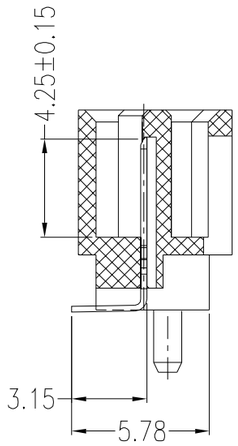

SECT B-B

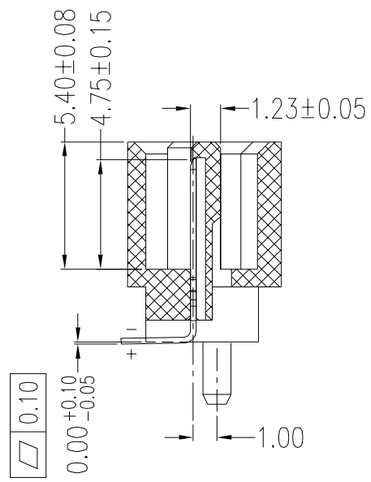

SECT A-A

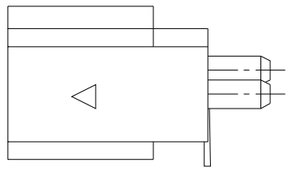

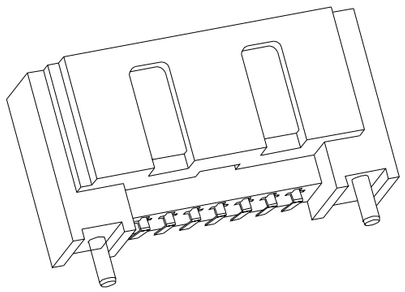

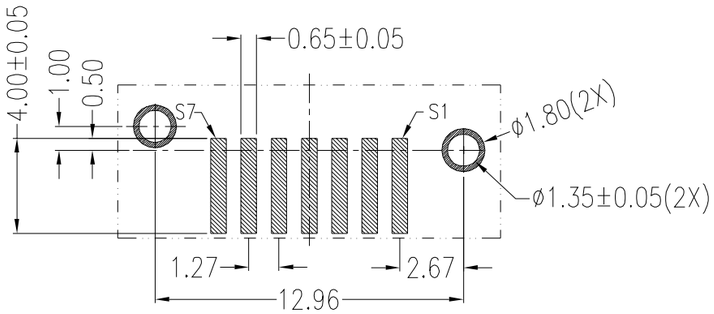

PCB LAYOUT(T=1.60mm)
COMPONENT SIDE

NOTES:

*Material

Housing: LCP, UL 94V-0 rated.
Contact: Brass;
Plating: Au plating on contact area;
Sn(100u" Min.) plating on solder tail;
Ni(50u" Min.) underplating overall.
Board Lock: Brass;
Plating: Sn (100u" Min.) underplating overall.
Ni (50u" Min.) underplating overall.

*Mechanical

Insertion Force: 45N Max.
Withdrawal Force: 10N Min.
Durability: 500 Cycles.

*Electrical Specification

Current Rating: 1.5 Ampere per contact;
Contact Resistance: 30mΩ Max.
Insulation Resistance: 1000MΩ Min.
Dielectric Withstanding Voltage: 500 V AC.

*Environmental

Operating Temperature: -55°C to +85°C.

*How to Order

WATF-07DBLCB1UW

- Blank:Black 4:Blue
- W:Winning Mark Blank:No Mark
- U:Lead Free
- 1:Rounded Copper Pole
- B:Shield (Double Holes)
- C:Reverse Straight SMT B TYPE
- L:LCP
- B:Brass
- Au A:>0.8u" D:15u" F:30u"
- NO. of Contacts
- Serial ATA for Mother

REV	Modify Notes And PCB Layout		
Units mm	Scale 3: 1	Drawing By LGH	Date 09/20-'18
Tolerance Unless Otherwise Specified		Reviewed By LDF	Date 09/21-'18
.X ~ ±0.35		Approval By Nancy	Date 10/22-'18
.XX ~ ±0.25			
.XXX ~ ±0.15			
Angle ~ ± 3°			

WIN WIN PRECISION IND., CO., LTD.
TEL: 886-2-22994155 FAX: 886-2-22994157

Date	09/20-'18	Title	SATA 7P Reverse Straight SMT B Type Shield Rounded Copper Pole(Through Type) Male
Sheet	1 of 1		
Third Angle Projection		Drawing No.	WATF-07PS-AN-W136 REV G