REV.	ECN.NO.	DATE
A	RELEASED	09/30-'10
H	Modify Notes	04/10-'17
I	Delete discontinued specifications	09/10-'24

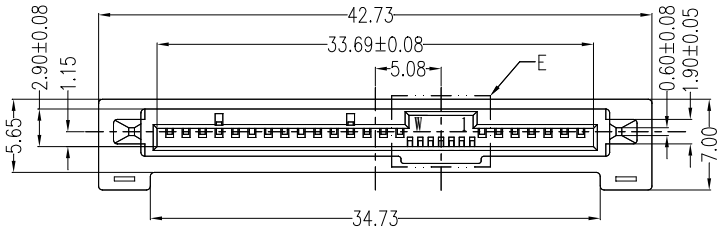

Signal Segment			
Pin NO.	Type	Name	Type
S1	Signal Ground	S8	Signal Ground
S2	TP+	S9	TS+
S3	TP-	S10	TS-
S4	Signal Ground	S11	Signal Ground
S5	RP-	S12	RS-
S6	RP+	S13	RS+
S7	Signal Ground	S14	Signal Ground

Power Segment			
Pin NO.	Type	Name	Type
P1	V3.3	P9	V5
P2	V3.3	P10	Ground
P3	V3.3	P11	Ready Led
P4	Ground	P12	Ground
P5	Ground	P13	V12
P6	Ground	P14	V12
P7	V5	P15	V12
P8	V5		

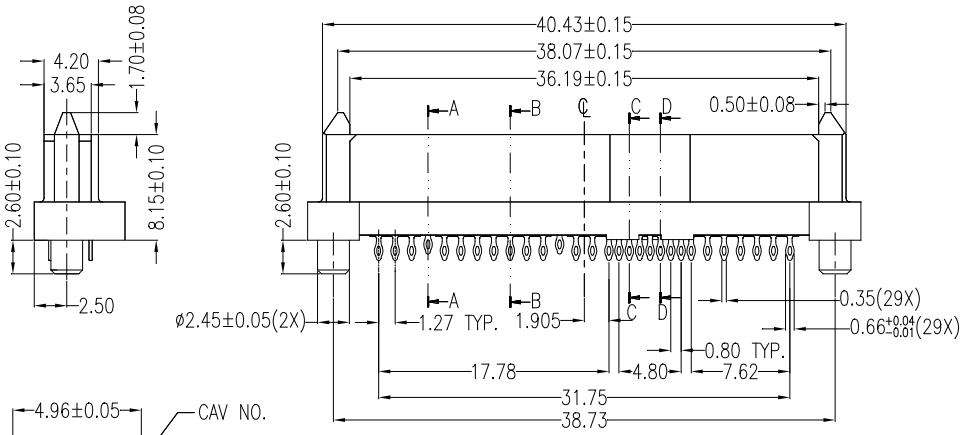

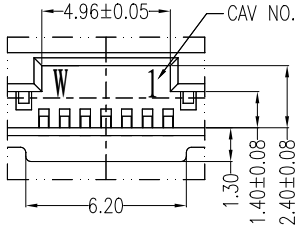

VIEW E
SCALE 2:1

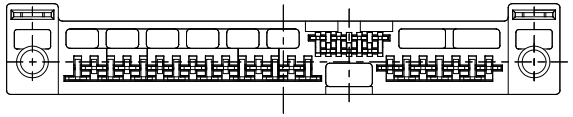

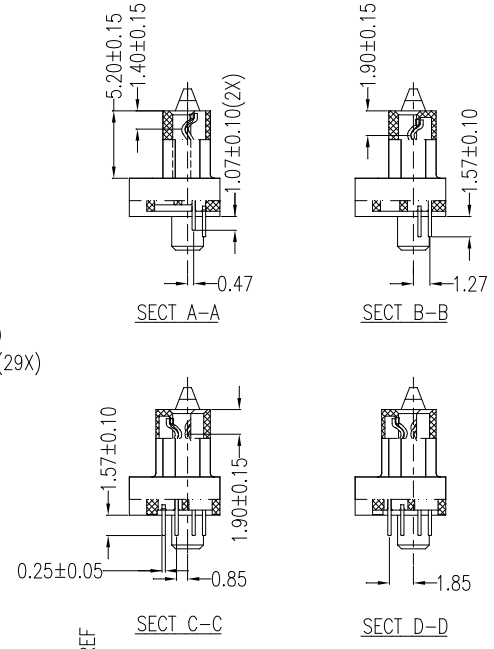

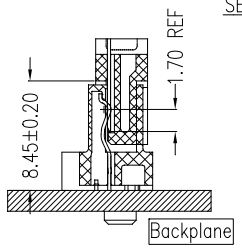

Backplane wipe requirements

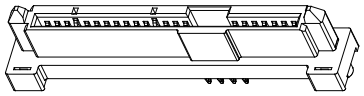

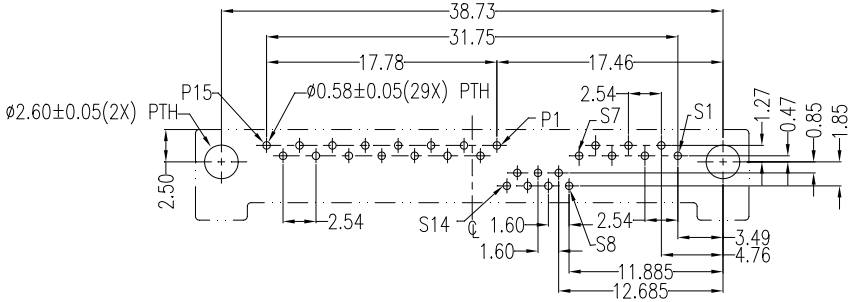

PCB LAYOUT(T=1.60mm)
COMPONENT SIDE

NOTES:

*Material

Housing: Nylon9T, UL 94V-0.
Contact: Phosphor Bronze.
Plating: Au Plating on contact area.
Sn(100u"Min) plating on solder Tail.
Ni(50u"Min) contact underplating overall.

*Mechanical

Insertion Force: 25N max.
Withdrawal Force: 5N min.
Durability: 50 cycles.

*Electrical Specification

Current Rating: 1.5 Ampere per contact.
Contact Resistance: 30 mΩ max.
Insulation Resistance: 1000 MΩ min.
Dielectric Withstanding Voltage: 500 VAC.

*Environmental

Operating Temperature: 0°C to +55°C

*How to order

WSAP-29DN91P2U3

- 3: Tray
- U: Lead Free
- 2: High 8.15mm(Pin L=1.57mm)
- P: Phosphor Bronze
- 1: Black
- N9: Nylon9T
- Au: A: >0.8u"; D: 15u"
- Number of Contacts
- Series No.

REV	Delete discontinued specifications				
Units	mm	Scale	5:3	Drawing By: XHQ	Date: 09/10-'24
Tolerance Unless Otherwise Specified				Reviewed By: LZX	Date: 09/10-'24
.X ~ ±0.35				Approval By: Nancy	Date: 09/23-'24
.XXX ~ ±0.15					
Angle ~ ± 3°					

WIN WIN PRECISION IND. CO., LTD.
TEL: 886-2-22994155 FAX: 886-2-22994157

Date	09/10-'24	Title	SAS 29P Vertical Double Row Female (Press Fit 1.57)
Sheet	1 of 1		
Third Angle Projection		Drawing No.	WSAP-22PS-AN-N356 REV I