REV.	ECN.NO.	DATE
A	RELEASED	07/29-'15
G	Modify NOTES	11/27-'18
H	Modify Title	05/20-'20

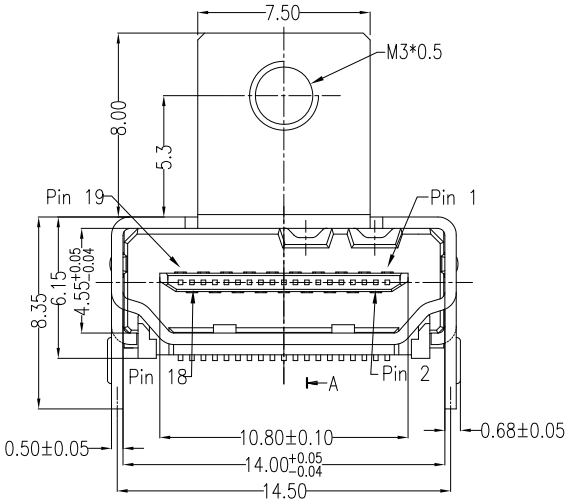

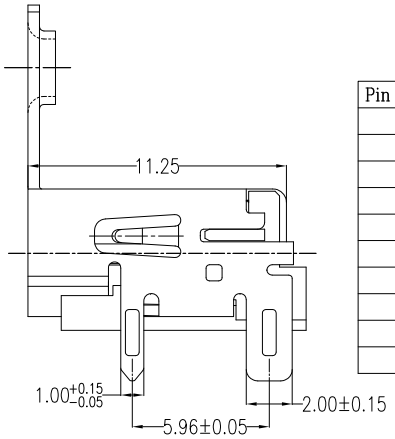

Pin No.	Signal Name	Pin No.	Signal Name
1	TMDS Data2+	11	TMDS Clock Shield
2	TMDS Data2 Shield	12	TMDS Clock-
3	TMDS Data2-	13	CEC
4	TMDS Data1+	14	Reserved (in cable but N.C. on device)
5	TMDS Data1 Shield	15	SCL
6	TMDS Data1-	16	SDA
7	TMDS Data0+	17	DDC/CEC Ground
8	TMDS Data0 Shield	18	+5V Power
9	TMDS Data0-	19	Hot Plug Detect
10	TMDS Clock+		

NOTES:

*Material

Housing: LCP, UL 94V-0 Rated; Color: Black.
Shield: Brass.
Plating: Ni(40u" Min.) Plating .
Contact: Brass.
Plating: Au plating on contact area;
Sn(100u" Min.) plating on solder tail;
Ni(50u" Min.) underplating overall.

*Electrical Specification

Operation Voltage: 40 VAC max.
Current Rating: 0.5 Ampere per contact
Contact Resistance: 10 mΩ max.
Insulation Resistance: 100 MΩ min.
Dielectric Withstanding Voltage: 500 VAC

*Environmental

Operating Temperature: -55°C to +85°C

*How To Order

WDMI-19F4L1BF3U1

- Series NO.
- Number of Contacts
- Au A:>0.8u" B:5u" D:15u" F:30u"
- 4:SMT(Molding)
- L: LCP
- 1:Black
- W:Winning Mark Blank:No Mark
- 1:Ni
- U:Lead Free
- 3:Tray 5:Reel
- F:With Flange(7.5)
- B:Brass

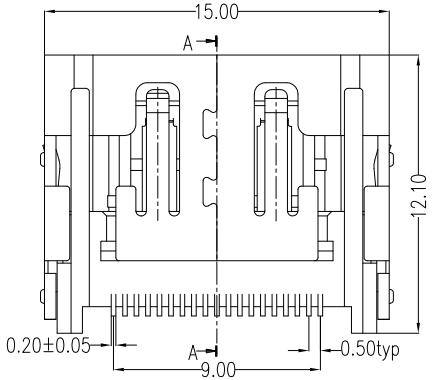

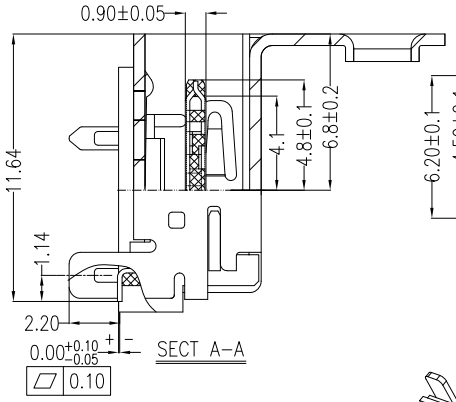

SECT A-A

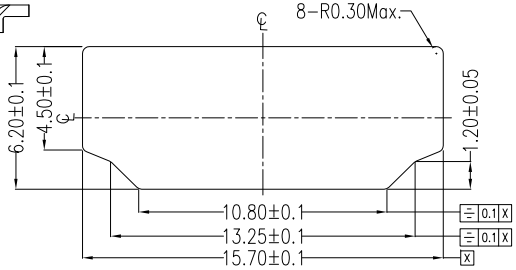

REFERENCE PANEL CUT OUT DIMENSION

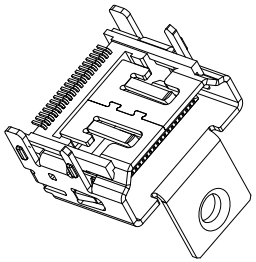

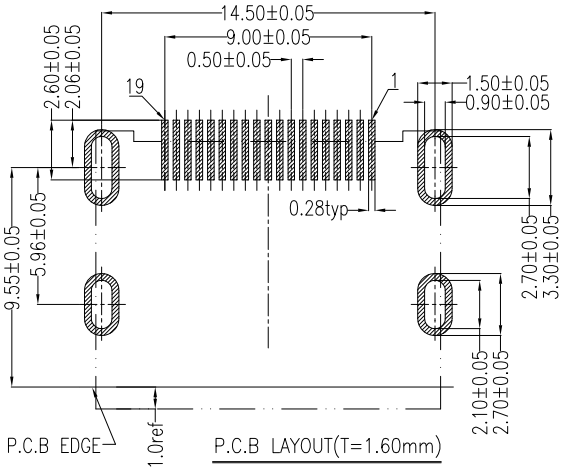

P.C.B LAYOUT(T=1.60mm)
COMPONENT SIDE

REV	Modify Title: Delete With Posts				
Units	mm	Scale	3:1	Drawing By: WWY	Date: 05/20-'20
Tolerance Unless Otherwise Specified				Reviewed By: LDF	Date: 05/20-'20
.X	`	±0.35		Approval By: Nancy	Date: 05/21-'20
.XX	`	±0.25			
.XXX	`	±0.15			
Angle	`	± 3°			

WINNING
WIN WIN PRECISION IND. CO., LTD.
TEL: 886-2-22994155 FAX: 886-2-22994157

Date	05/20-'20	Title	High Definition Media Interface 19PIN SMT Type (With Flange-7.5mm)(Molding)
Sheet	1 of 1		
Third Angle Projection		Drawing No.	WDMI-19PS-AN-N118
		REV	H